CERTIFICATION OF THE QUALITY SYSTEM OF THE COMPANIES

UNI EN 29001
ISO 9001

Member of

The reproduction and/or divulgation of this drawing or its included informations is strictly prohibited unless authorized by the owning company DUCATI S.p.A.

E' vietata la riproduzione e/o la divulgazione di questo disegno unitamente alle informazioni in esso contenute senza l'autorizzazione della DUCATI S.p.A.

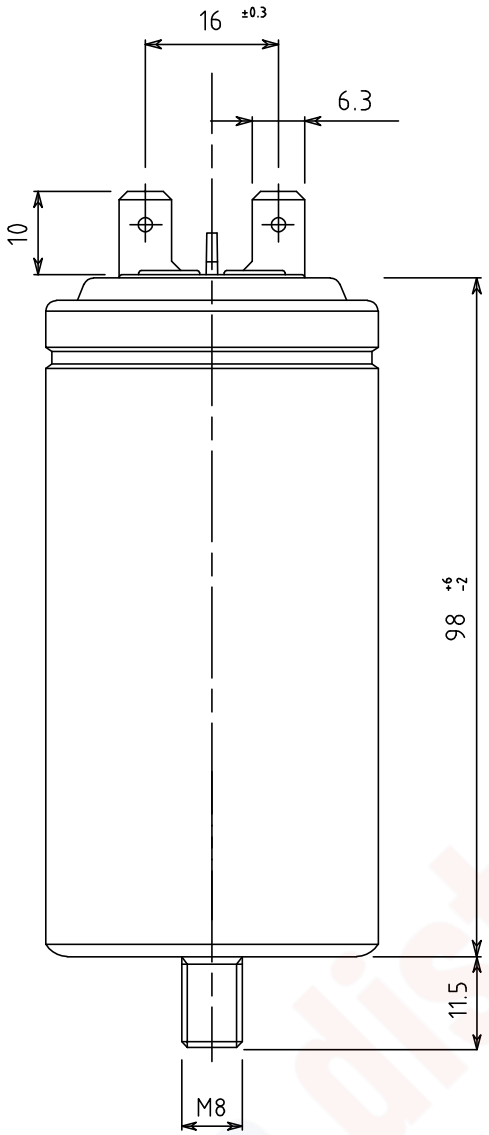

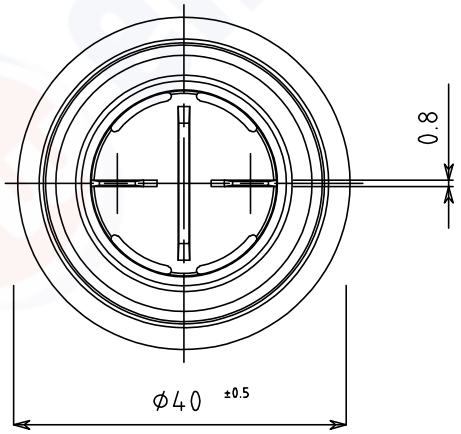

Characteristics:

Dry metallized polypropylene capacitor.
Case in aluminum.
Capacitive element enclosed in an insulated can completely sealed with polyurethane resin.
Cover in thermoplastic elastomer material.

Cover material properties:

Ball pressure test (IEC 695-10-2): 125°C
Glow wire test (IEC 695-2-11): 850°C
Tracking resistance (IEC 112): >= 250V

DUCATI part number: 416334129

Capacitance tolerance: 16 μF ±5%

Test voltage(routine test)

Between terminals: 1000Vac 2sec.
Between terminals to case:3Kvac 2sec.

Climatic category: -25/85/21

Operation classes and approvals:see marking

Protection degree: IP00

Reference standard: EN60252-1/A1
UL810

Marking:

DUCATI energia

416.33.41.29
16 μF ±5%
425V 30000h/cl.A
475V 10000h/cl.B
500V 3000h/cl.C
-25/85/21 50-60Hz S2

EN 60252-1/A1

400Vac 50-60Hz
-25/70°C 10000AFC
PROTECTED
CSA C22.2 N°.190-M1985
Tamb.max 46°C

Ed.	Descrizione/Description	Data/Date	Firma/Sign.

MODIFICHE/REVISIONS

DUCATI energia s.p.a.	mm	TOLL. QUOTE LIBERE (TOLERANCE RATE) UNI-ISO 2768-m	TOLL. QUOTE LIBERE ANG. (ANG. TOLERANCE RATE)	SCALA/SCALE	DATA/DATE 16/01/2023	FIRMA/DRAWN Parmeggiani E.	VISTO/CHECKED
	OGGETTO/PART NAME Dimensions for metallized polypropylene film capacitor for A.C. use.				CODICE/PART NR. 416334129		
					EDIZ./EDIT.		